# ROOT CAUSE ANALYSIS

## EXERCISE: DIESEL ENGINE COOLING SYSTEM
## (Design and Application Review)

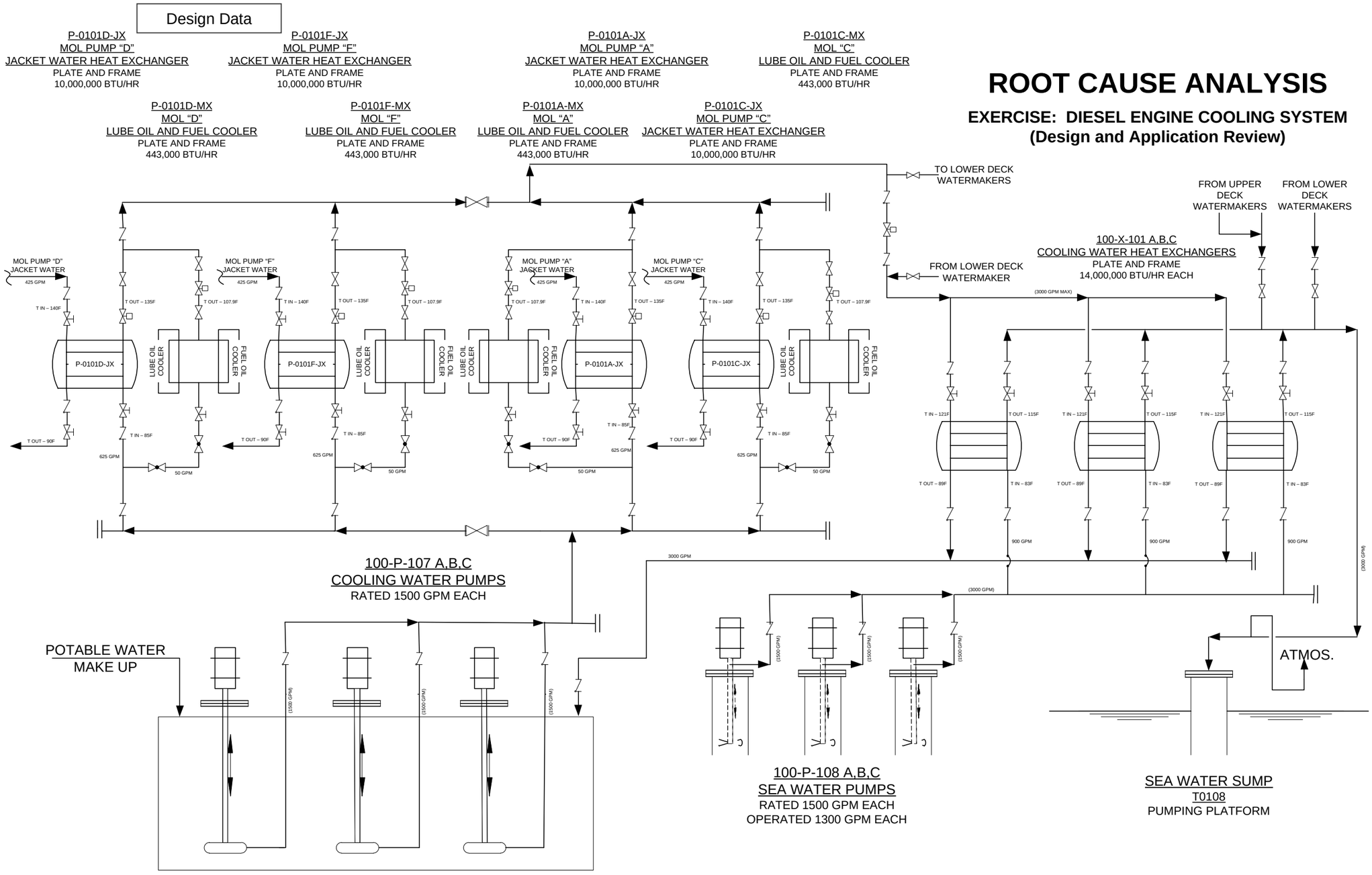
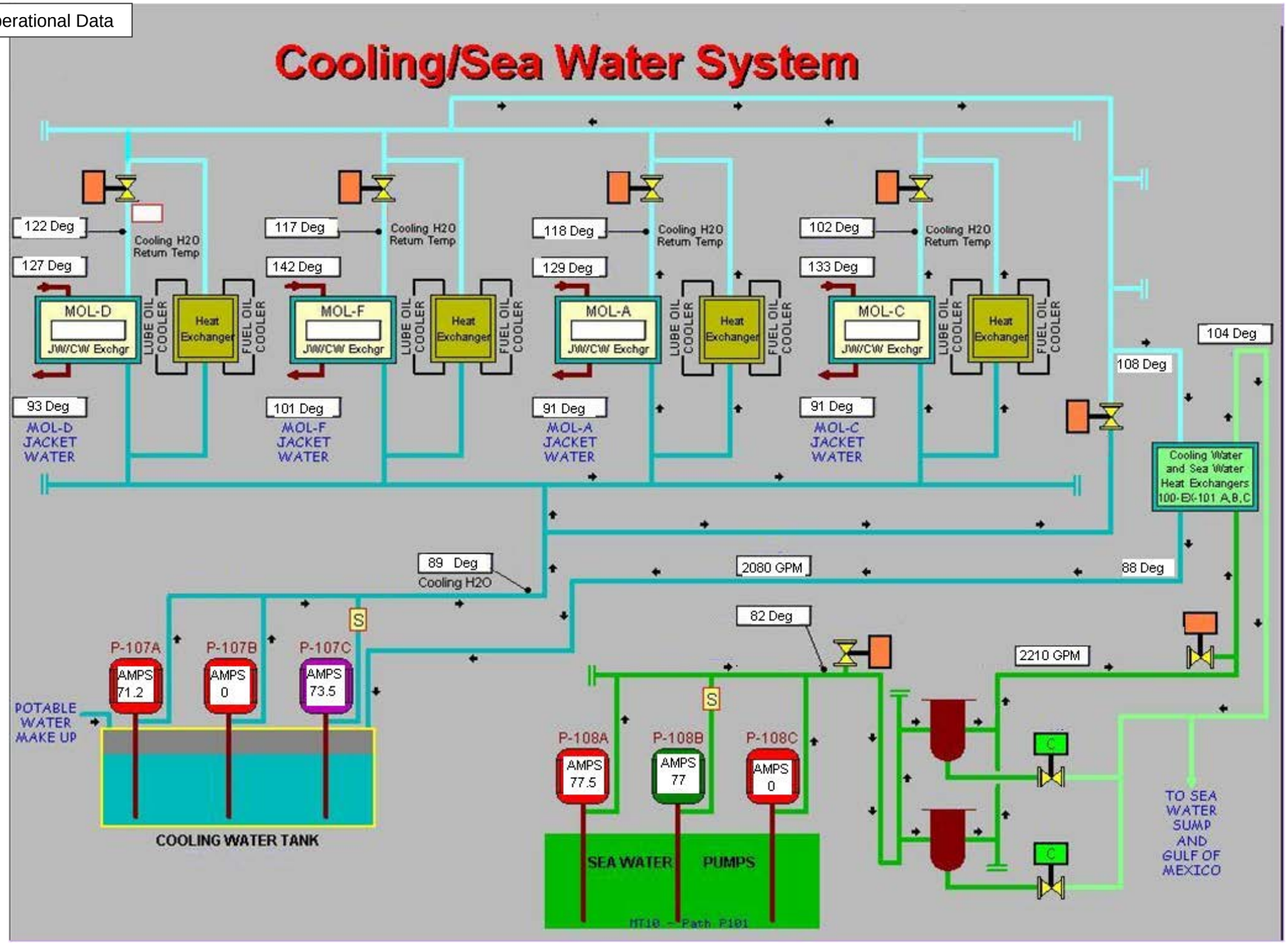
Operational Data